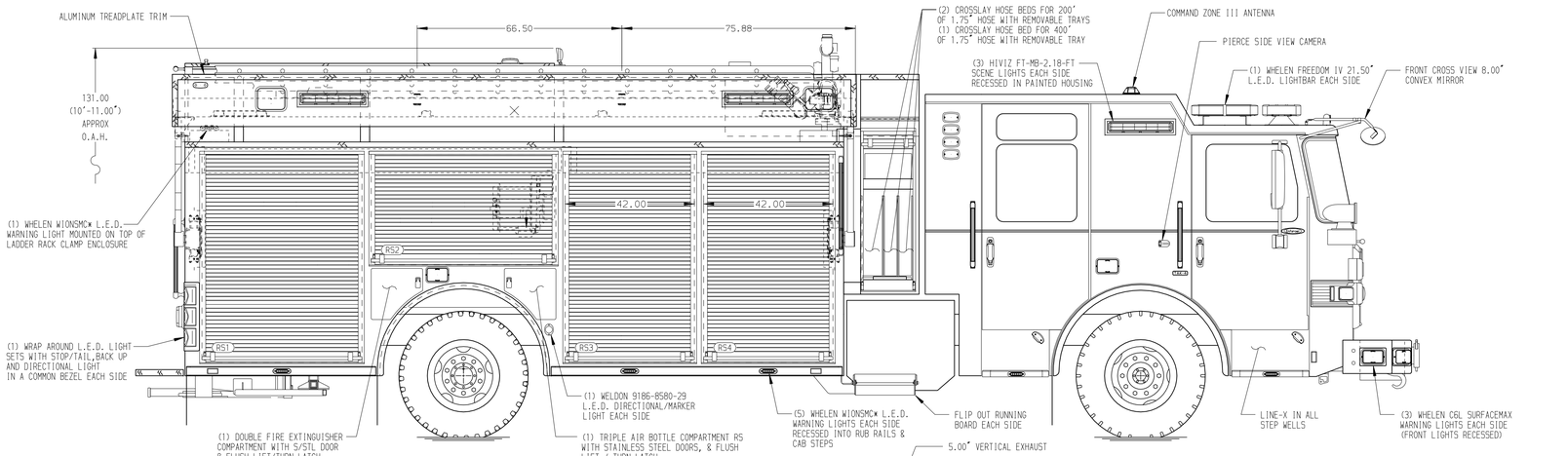

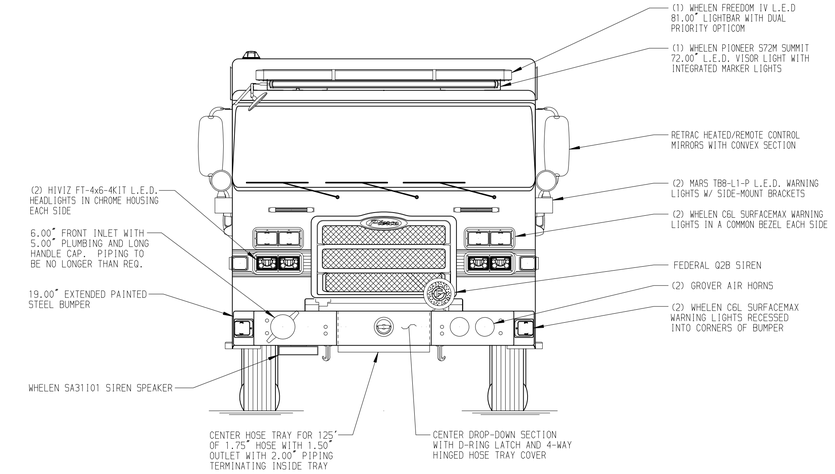

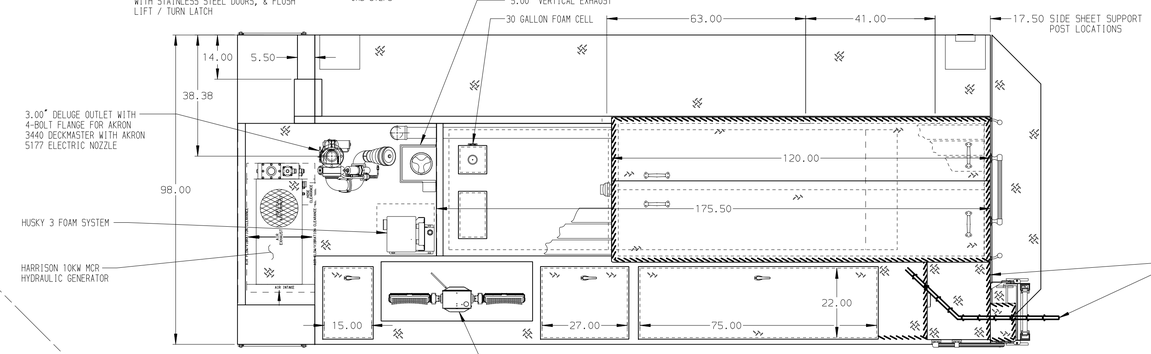

HOSEBED CAPACITIES

1. 1200' OF 5.00" DJ HOSE
2. 400' OF 1.75" DJ HOSE
3. 200' OF 2.50" DJ HOSE
4. 200' OF 3.00" DJ HOSE

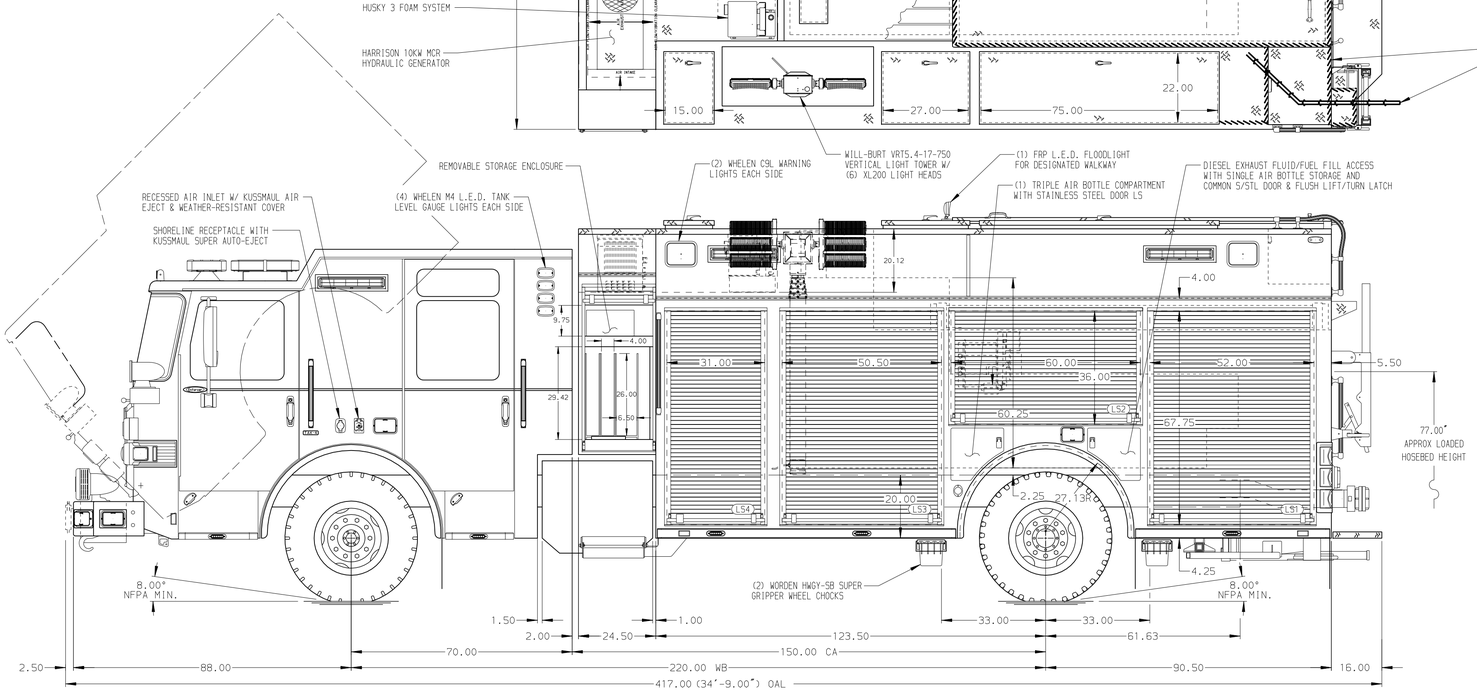

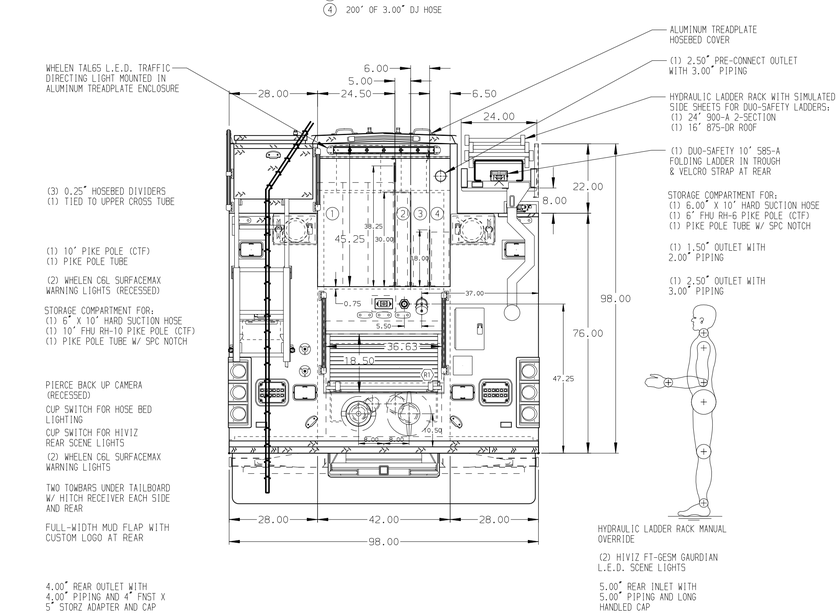

ALUMINUM BODY

SIDE ROLL AND FRONTAL IMPACT PROTECTION

CUSTOMER APPROVAL

APPROVED BY: _____

DATE: _____

Pierce MANUFACTURING INC.

NOTE

DIMENSIONS SHOWN ARE APPROXIMATE AND ARE SUBJECT TO MINOR DEVIATIONS AS MAY OCCUR OR BE NECESSARY IN CONSTRUCTION.
MINOR DETAILS NOT SHOWN.

1. ONSPOT AUTOMATIC TIRE CHAINS TO BE PROVIDED AT REAR
2. BATTERY CHARGER INDICATOR LOCATED ON DRIVER'S SEAT RISER
3. BATTERY CHARGER MOUNTED BEHIND DRIVER'S SEAT
4. DUAL L.E.D. LIGHT STRIPS LOCATED IN HOSE BED
5. CTECH 3-DRAWER DRAWER ASSEMBLY IN COMPARTMENT LS3
6. TWO 15/20A - 120V DUPLEX RECEPTACLES LOCATED INSIDE CAB
7. ONE 15/20A - 120V DUPLEX RECEPTACLE IN COMPARTMENTS LS1 & RS1
8. ONE 30A 240V WATER-PROOF RECEPTACLE LOCATED IN COMPARTMENT RS1
9. CIRCUIT BREAKER PANEL LOCATED IN COMPARTMENT LS3
10. LIGHT TOWER CONTROLLER LOCATED IN PUMP OPERATORS AREA
11. ONE HANNAY ELECTRIC REWIND CORD REEL MODEL 1618-17-18 LOCATED IN LS2 & RS2 WITH 200' OF 10/3 CABLE, JUNCTION BOX, AND TREADPLATE JUNCTION BOX HOLDER

REV	DATE	BY	CH
▽	-	-	-

CHASSIS DATA
MAKE: PIERCE
MODEL: ENFORCER

TITLE: 1500-D-780P, 750G WATER/30G FOAM, 214" RESCUE BODY SIDE CONTROL, (3) CROSSLAYS, DELUGE, CORD REELS

FOR: PO-MAR-LIN FIRE COMPANY
UNIONVILLE, PENNSYLVANIA

DWG NO. 33474AD

JOB NO.	33474
SCALE	1:24
DATE	
DRAWN BY	GVH
	25JAN19
CHECKED BY	NPA
	25JAN19
SHEET SIZE	D
SHEET NO.	1 OF 1